LASERPECKER

Operation Manual of Laserpecker2

Product Name: LaserPecker
Model: L2
Version number: 2021-7A

Important notes Distance from laser outlet to surface of engraved object must be 110mm. Pull down L-shaped ranging rod to measure the height, ensure bottom edge of ranging rod contacts engraved surface.

Download APP

1. Search for [LaserPecker] in APP markets such as Huawei App Gallery, Google Play Store, and Apple App Store to download.
2. Scan below QR code to download Laser-Pecker APP.
3. Download the APP from our official website www.laserpecker.net.

Note: After installing the APP, please read the warnings and instructions in the APP carefully to ensure that the product is used correctly.

Google Play

App Store

Scan QR code to download APP

After-sales service

- We offer global online technical support for this product. If you encounter any problems during your use, please feel free to contact us and we will respond to you as soon as possible.
- Facebook : LaserPecker 2
- Email : support@laserpecker.com
- Tel.: +86 0755-28913864

Scan QR code to watch instruction video

LaserPecker 2 VIP Group

Contents

01. List of product accessories

02. Key/ indicator instructions

03. Quick installation instructions

04. Bluetooth connection

05. Product specification

06. Use safety guide

07. Precautions

08. Disclaimer

09. Warning

10. Warranty terms

11. Copyright

01/List of product accessories

Laser unite

Power cord/power adapter

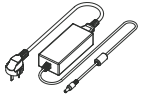

Electric Stand

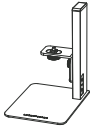

Laser shield

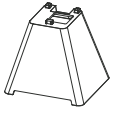

USB cable ×2

Goggles

Ruler

Wrenches and screws

02/Buttons/ indicator instructions

- Indicator of laser unit/electric stand

1. Preview button
2. Power switch： hold to power off or cancel the on going engraving
3. Laser unit indicator 1
4. Laser unit indicator 2
5. Long press to continuous rise / short press to rise 1mm
6. Power indicator
7. Long press to continuous drop / short press to drop 1mm

- Power ports

8. Electric stand power port
9. Laser shield power port
10. Laser Unit DC power supply port
11. Electric stand power port
12. Smoke extractor outlet
13. Computer connection port

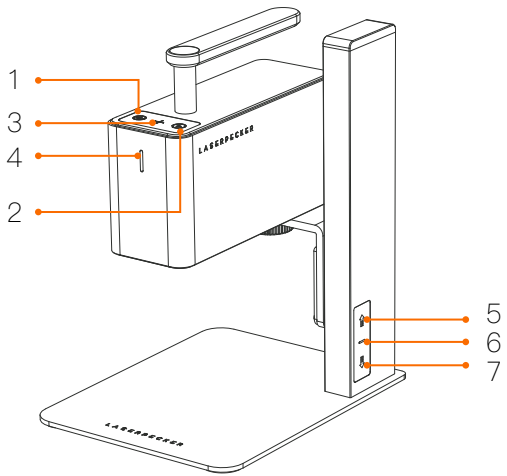

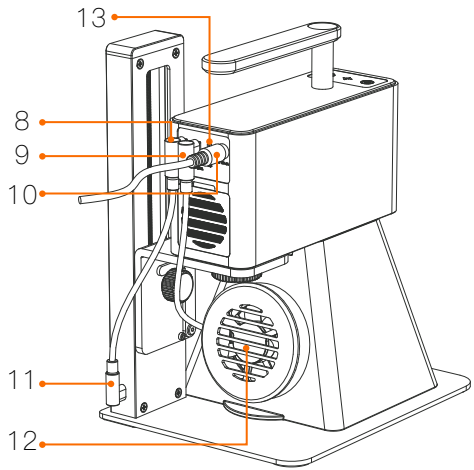

03/Quick installation instructions - electric stand

1 Assemble the electric stand

2 Lock the laser unit to electric stand, connect to power supply and prepare to adjust height.

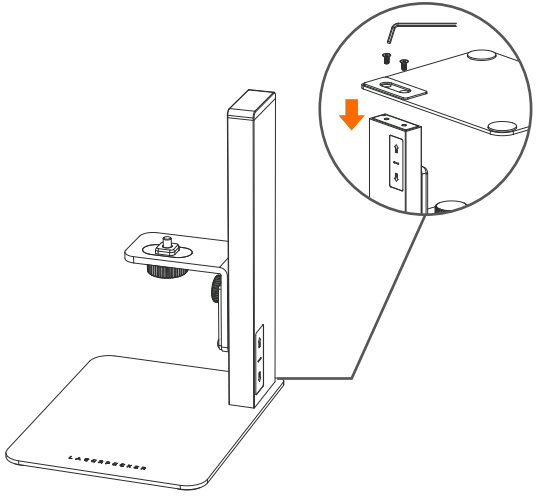

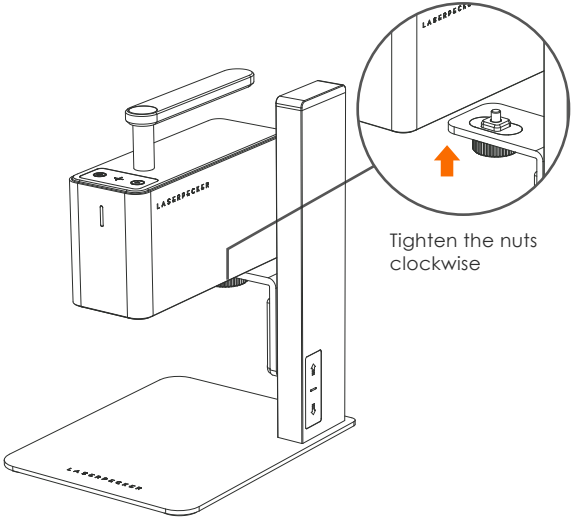

Tighten the nuts clockwise

3-1 ranging method 1: Ruler ranging

Place the engraved object, adjust the height of stand, and measure it with a ruler, so that the bottom of machine is110mm from engraving surface.

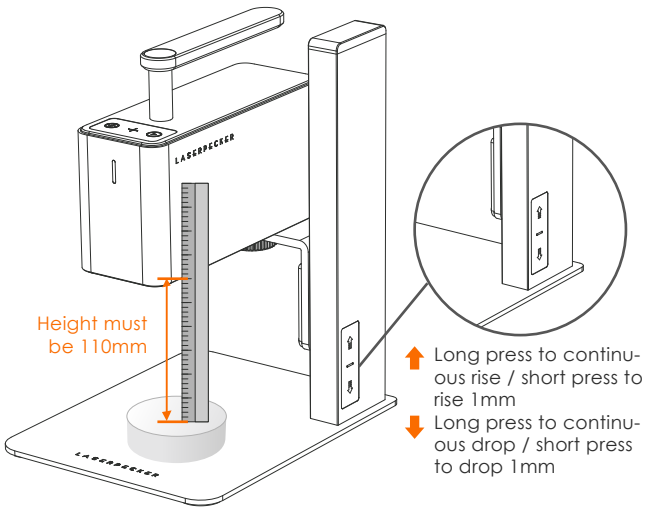

3-2 ranging method 2: Ranging by ranging rod

Place the engraved object, pull down L-shaped ranging rod, adjust the height of stand, let the bottom edge of ranging rod touch the engraving surface, retract the rod after ranging completed.

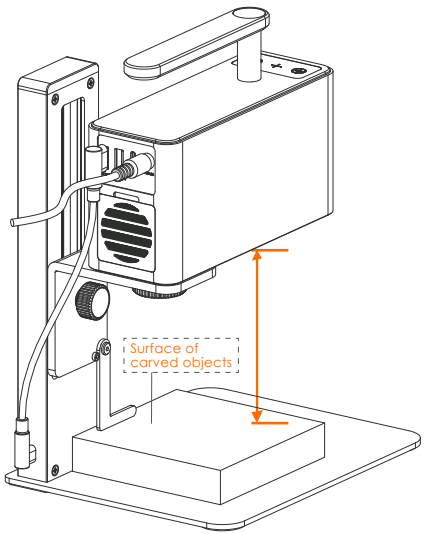

3-3 ranging method 3:
The bottom edge of protective cover contacts the object surface

Mount the shield into bottom of he laser unit, place engraved object on the base,adjust the height of stand, let the bottom edge of shield contacts the engraving surface so that the laser distance is 110mm.

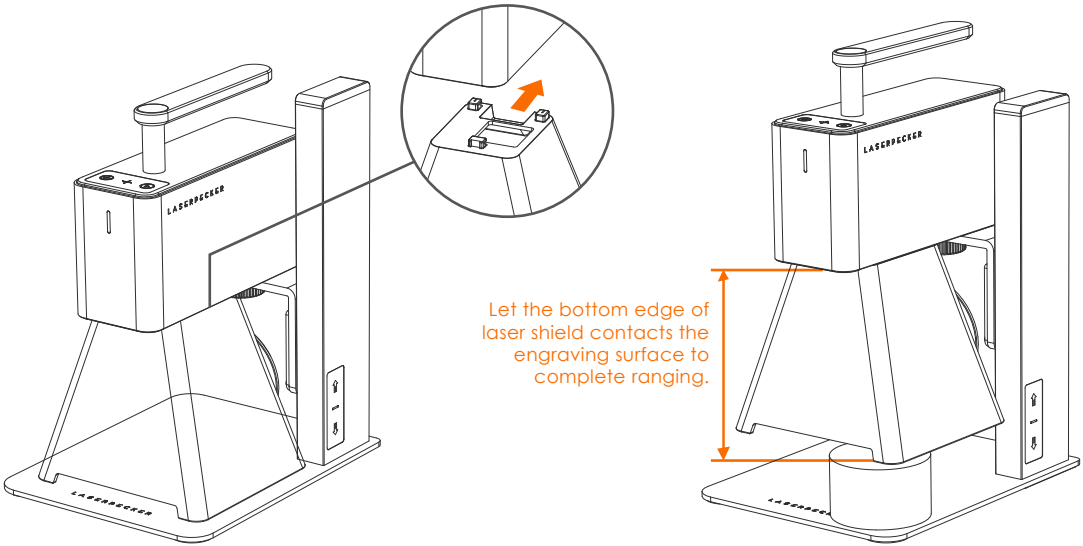

03 /Quick installation instructions

• Tilted engraving

Loosen the konb, adjust the laser unit to a suitable angle, tighten the konb to secure the laser unit for tilted engraving.

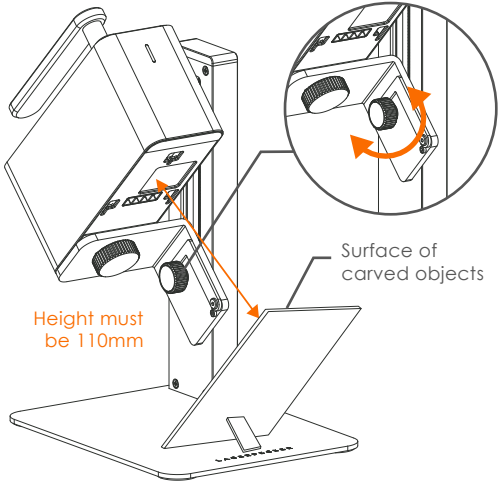

• Handheld engraving

Mount the laser shield into the machine bottom and connect to power supply without installing . Hold the handle aiming at the surface of engraved object.

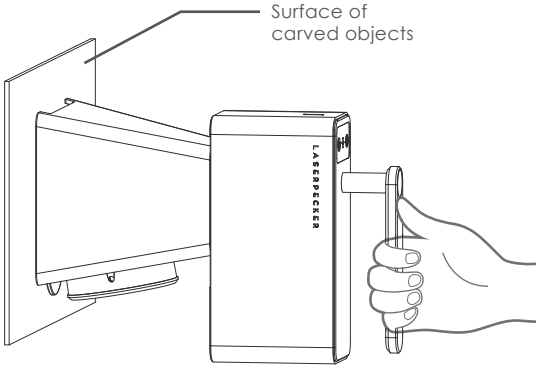

04/Bluetooth connection

1. Open APP after the device is ready, and search for Bluetooth device.

2. The laser unit indicator blinks blue, suggesting it is standing by for Bluetooth connection. It turns solid blue when connected.

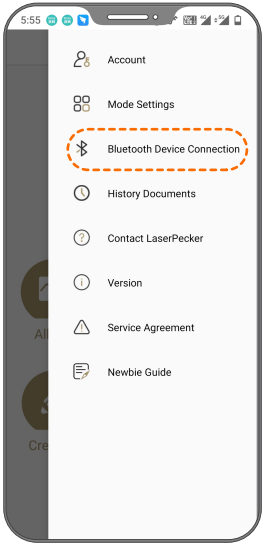

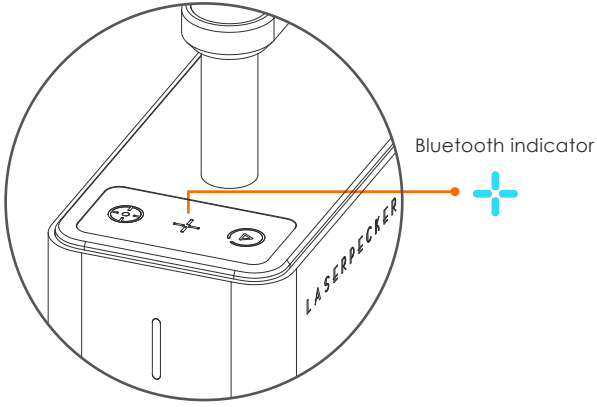

Supplementary instruction: Machine Maintenance

- The dust filter on the machine back can be removed for cleaning

Normal state

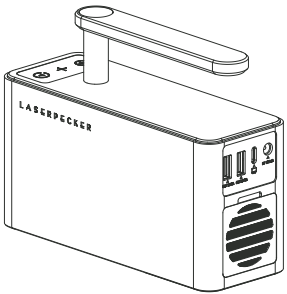

Removed for cleaning

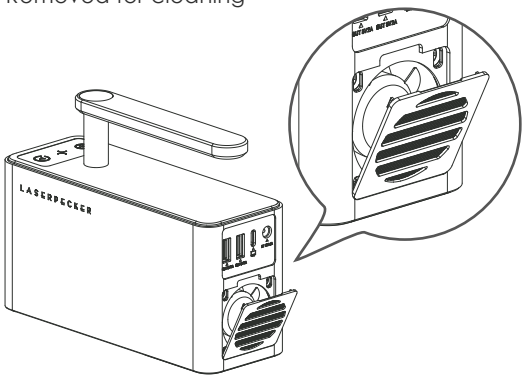

05/Product specification

Size	Laser Unit: 162.5*60*122mm Electric stand: 194*153.5*236mm
Weight	1748g
Laser source	450nm NICHIA
Laser source output power	5000mW
Appearance	Anodic oxidation of aluminum alloy
Document transmission	Bluetooth 5.0
Support document format	BMP/ JPG/ PNG/ SVG/ G-code
APP Connection Mode	Bluetooth connection, USB connection
APP operating system	Support iOS 9.0+, Android 6.0+, MacOS 10+, Windows 10+
Power input	DC(12V,5A),AC(100-240V,50-60Hz)
Operating temperature range	0°C-65°C
Operating humidity range	5%～80% (Non-zero frost)
Safety certification	EC 60825-1 (Laser Level I safety specification), CE, ROHS, FCC, FDA, CDRH registration IEC 60825-1 (Laser Level IV), NCC, KC, UKCA, TECLEC
Patent application	Seven patents

06/Use safety guide

• Before starting the installation of LaserPecker2, please first check that the equipment is intact and the laser mirror is clean.

• Installation specifications: Before operating LaserPecker2, please secure the host referring to the Operation Manual (use the accessories with fixing function (protective cover, electric support and third shaft) to support the objects) to avoid falling due to unstable placement.

• Please power the equipment with the power and type (adapter with 12V5A) as indicated in the operation manual.

• Before starting the laser carving, please make sure to take safety protection measures, such as adding protective covers, wearing goggles to prevent eye or skin injury, removing irrelevant items to prevent unnecessary damage caused by laser irradiation, and especially removing flammable and explosive items to prevent fire.

• After starting the laser carving, do not move the equipment, so as not to cause the equipment to stop working due to self-protection, or even affect the final effect of the carving work because the carving objects are removed.

• To move the equipment or carved objects, please operate before the carving or after the carving is done. Do not move the equipment or items during the laser work.

• Because of the risks of laser, do not bring minors, children, and people with close to the equipment at work.

• Before carving objects using this product, please check that the carved object will not release toxic or harmful gas during the laser burning process to avoid poisoning accidents.

•If odor or smoke is found during the carving, please use the fan to blow away or place it in a spacious and ventilated place.

• Before carving objects using this product, review whether the carved objects have total reflection or diffuse properties. Special attention should be paid to the safety protection of such objects (it is suggested to carving after blackening the carved area with the whiteboard pen).

• Do not use LaserPecker2 to directly illuminate the human body or pet skin and eyes, so as not to cause irreversible damage.

• Due to the limited power of LaserPecker2 laser components, it cannot carve metal, glass and other hard materials directly (some materials can be carved after blackening with a whiteboard pen or processing by heat transfer layer and heat transfer paper).

07 /Precautions

• Please carefully read the [Use Safety Guide] and keep in mind for standard operation.

• This product does not contain any user-replaceable components. Do not attempt to remove LaserPecker or exclude the problem by yourself, regardless of the scenario.

• The working LaserPecker will emit laser. The beam is at risk of burns to the human skin; The damage is extremely serious for the eye parts of the human body or animal (pet). In addition, the screen damage to mobile phones and Pads is also extremely serious. The proper use and maintenance of this product are very important for the safe operation of this product. Please strictly follow the instructions in this manual for the operation and maintenance specifications of this product.

• Be sure to wear protective goggles throughout the operation of LaserPecker.

08 /Disclaimer

Thank you for purchasing LaserPecker 2. What mentioned in this article refers to your security and legal interests and responsibilities. Before using this product, please carefully read this article to ensure the correct setting of the product. Failure to operate following the instructions and warnings described herein may cause injury to you and people around or cause damage to LaserPecker2 or other surrounding items. Operating this product means that you have carefully read the disclaimer and warning information, understood, recognized and accepted all terms and contents of this statement. You promise to be fully responsible for the use of the product and possible consequences. You commit to use this product only for a normal purpose, and agree to this clause and any relevant regulations, policies and guidelines developed by Hingin. LaserPecker2 is not liable for damage, injury, and any legal liability arising from the direct or indirect use of the product. Users shall follow all safety guidelines referred to herein.

09 /Warning

•Before operating LaserPecker2 equipment, please carefully read the operation contents and strictly observe the operating procedures.

• This equipment uses four types of lasers (intense laser radiation), which may cause the following accidents: 1) Light up the surrounding flammable materials; 2) During the laser operation, other radiation, harmful gases, toxic gases or smelly gases may be produced due to different laser radiation objects; 3) Direct exposure to laser emission may hurt human body. Therefore, the operator must keep a distance from the equipment, and wear protective equipment (such as goggles, protective covers, protective clothing or firefighting equipment, etc.). It is strictly prohibited to pile up flammable and explosive items around the workbench and equipment. The working environment must be kept well ventilated.

• There may be risks during the laser working process. The users should carefully consider whether the material of the carved object is suitable for laser operation.

• The working voltage of the equipment is 12V5A. It should be powered using the adapter of suitable specification. Operation during overload or voltage instability is strictly prohibited. Under the premise that the power supply (such as the patch board) used by the power plug of this product does not work effectively, the power supply cannot be connected, otherwise there will be a dangerous risk of electric shock.

• This product is internally equipped with precise and dangerous laser source components. The equipment is strictly prohibited to work near appliances with strong electromagnetic interference because this may cause electromagnetic interference. When the laser source is turned on, there will be laser emitted at the speed of light. The user must avoid direct exposure to the laser beam.

• It's strictly prohibited to place any irrelevant object of total reflection or diffuse reflection in the equipment, in case the laser may be reflected to human body or inflammables.

• Before carving objects using this product, please ensure that the emissions resulting from laser exposure to the carved objects meet the local laws and regulations.

10/Warranty terms

• To the extent permitted by law, this warranty is exclusive and supersedes all other express or implied or legal warranty conditions (including in any case for a particular purpose, provided by the statute or any other circumstance), including, but not limited to, any liability derived the commodity suitable for a particular use. In addition, Hingin will not be responsible for any unexpected, special, indirect, or derivative damage (it may originate from use, misuse, nonuse, or product defects).

•When consumers apply for warranty service, they have the obligation to back up all the important data in advance. The data will disappear during the maintenance process, such as the replacement of parts or the updated product software version, and Hingin will not provide data backup or the complete data and set value.

•The product is entitled to free shipping and free maintenance warranty within 15 days of the shipping date. Express fee will be paid after 15 days in the warranty period.

• For any products following the replacement or maintenance, Hingin will give a longer warranty of the remaining warranty period of the original product or the 30-day warranty following the replacement.

•When consumers apply Hingin for warranty services for the products sold in non-Chinese mainland areas, due to the laws and regulations, safety regulations, tariffs, maintenance technology and parts inventory, parts sold in countries and regions cannot be sent back to Hingin for warranty services, for which Hingin can only provide limited warranty services. Therefore, consumers not in mainland China, whether they are within the warranty scope, need to seek warranty services through the path authorized by the original country, and will charge the inspection and labor processing fees. If the country for the recipient levies additional tariff, it will be borne by the consumer itself; Consumers who apply for warranty service directly to Hingin may take the similar measures.

•Distributors may sell Hingin products to consumers in non-Chinese mainland areas. If they provide value-added services different from this warranty, the services are valid only for the area sold by distributors and unrelated to this warranty service.

•Processing quality is highly related to user operation, processing material and processing environment, not within the warranty scope.

11 /Copyright

• The copyright of this manual is the right of the software and hardware involved in the product, which belongs to Shenzhen Hingin Co., Ltd. (hereinafter referred to as "Hingin"). LaserPecker is the registered trademark of Hingin.

• The information in this manual may be changed without notice; The information in this manual does not constitute a commitment of the Company. Please learn about the latest update from https://www.laserpecker.net.

• The contents of this manual shall not be rewritten or forwarded in any form or for any purpose without the written permission of the Company.