V802 PRO BAIT BOAT

GPS VERSION USER MANUAL

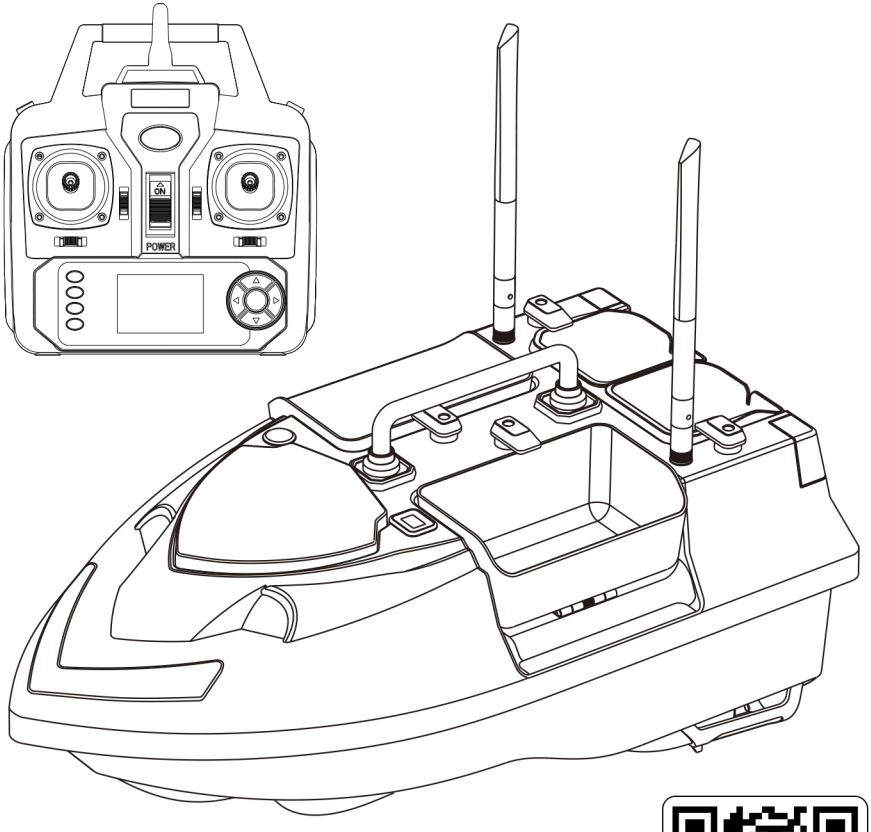

POWER SUPPLY PROMPT

You can make the boat operational by simply connecting any power cord to a battery.If you use two batteries at the same time, you can significantly prolong its working time.

BOAT INSTRUCTION V802 PRO USER MANUAL

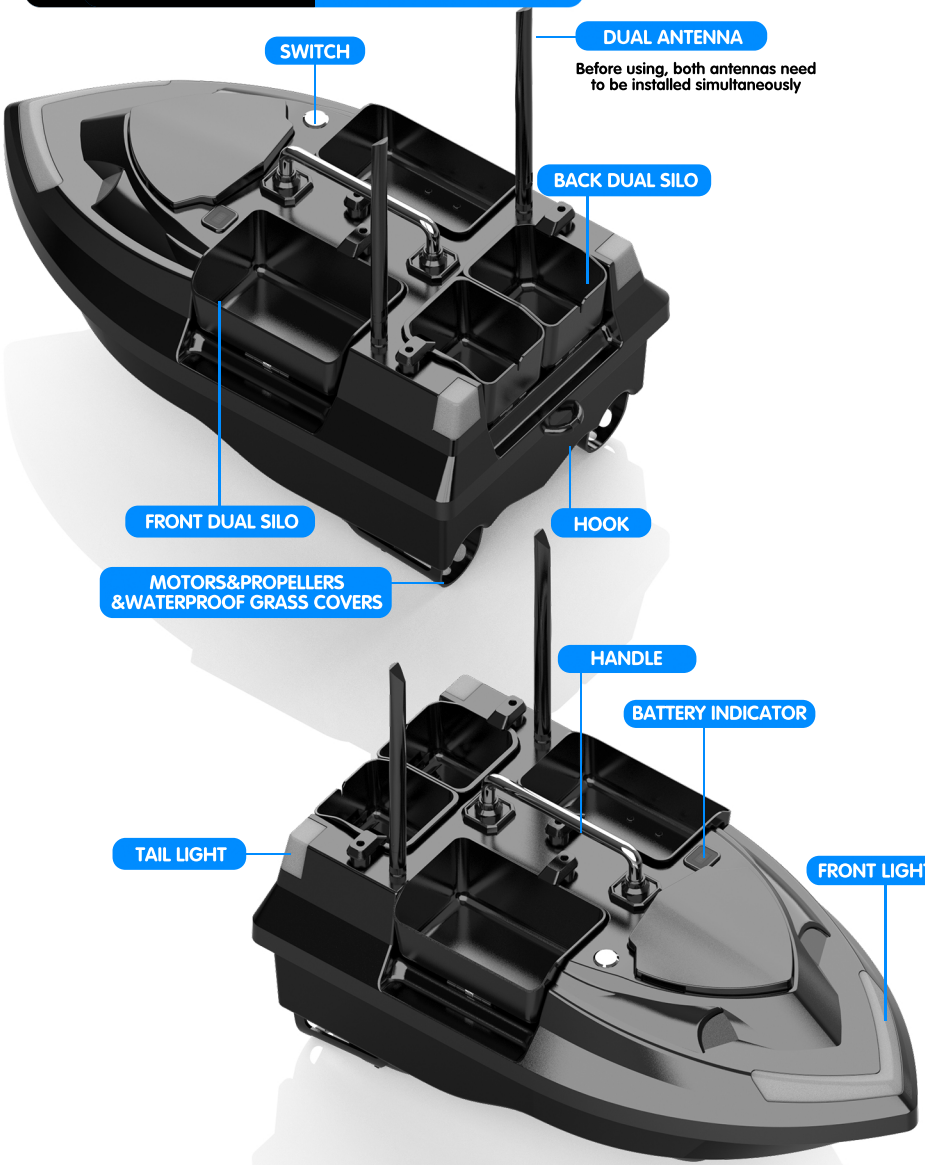

STREAMLINED HULL
2.4G REMOTE CONTROL
7.4V LARGE CAPACITY BATTERY

Battery usage and charging instructions:

●Boat battery (standard configuration)

This boat has a built-in battery, just connect the battery connector when using

●Connect to the power supply

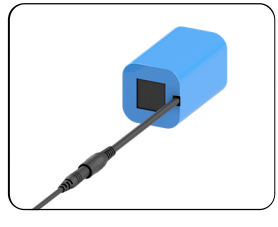

CONTROLLER V802 PRO USER MANUAL

Diagram of boat Light Turning Direction

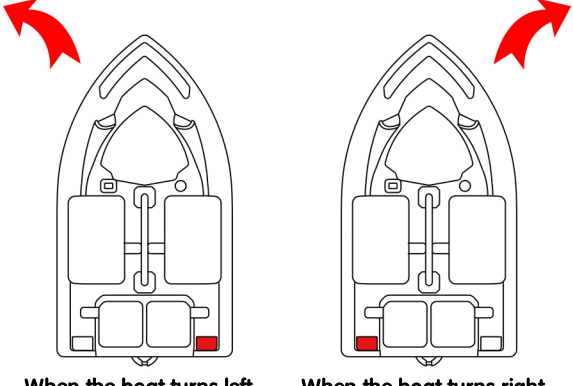

When the boat turns left, the right taillight lights up red

When the boat turns right, the left taillight lights up red

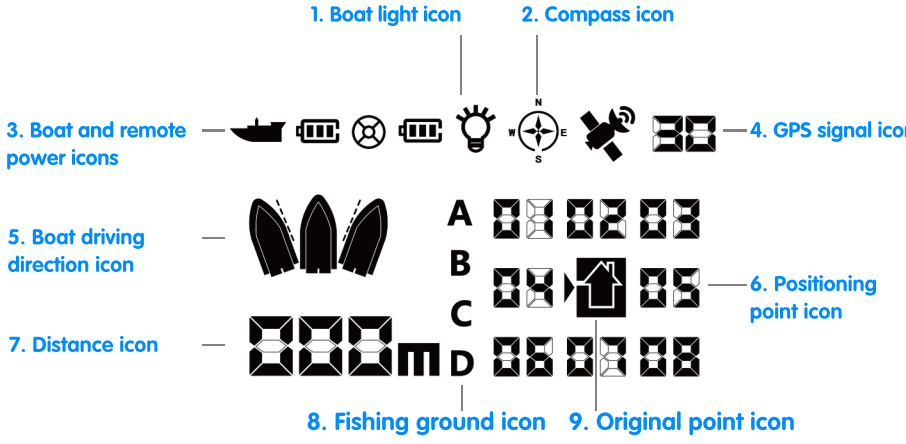

1. Boat light icon: When the boat is started, the front and rear lights are always on, and this icon will be displayed. If you press the light button to control the boat light, the boat light is always on, and this icon will remain on. When the boat light flashes, this icon will also start to flash.
2. Compass icon: The compass icon points to the corresponding direction of the bow after calibration; when not calibrated, it points to N by default.
3. Boat and remote power icons: left: boat battery power, right: remote control battery power.
4. GPS signal icon: This icon will not be displayed when the power is turned on. When the GPS signal is searched, the icon will be automatically displayed, and the number represents the number of satellites searched.
5. Boat driving direction icon: This icon represents the direction of the boat. It lights up in the middle when moving forward or backward; lights up on the left when turning left; lights up on the right when turning right; lights up in the middle when fixed-speed cruise, and flashes on both sides at the same time.
6. Positioning point icon: The numbers around are positioning point coordinates. You can turn the page to set the point. There are 5 pages in total, and 40 positioning points can be set.
7. Distance icon: If no positioning point is set, the distance information will not be displayed. After the original point is set, the distance between the boat and the original point will be displayed. In the fixed point cruise function, the distance between the two positioning points will be displayed.
8. Fishing ground icon: ABCD represent 4 fishing grounds respectively. You need to set a fishing ground before you can set the positioning point.
9. Original point icon: The house in the middle represents the original point. You need to set the original point before setting the fixed point to realize the return function.

Power on and pair

Place the boat on flat ground, keep the remote control at least 0.5 meters away from the boat, turn on the boat switch first, see the tail light flashing, then turn on the remote control. When the remote control makes a "beep" sound, the indicator light on the remote control is always green, and the boat light is always on, indicating that the remote control and the boat are connected. At this time, the boat light icon is displayed on the remote control interface, and the GPS icon is not displayed.Note: If the pairing is unsuccessful or the remote control is disconnected from the boat, you need to turn off the power of the boat and the remote control and do the pairing operation again.

Calibration

The boat needs to be calibrated before use. When the remote control and the boat are matched, the GPS satellite icon is displayed on the remote control screen, and the number next to the icon is greater than 8, calibration can be performed.After driving the boat a few meters away from the shore, press the calibration button, the boat will turn left and right in the water. When the boat stops turning after calibration, the remote control will emit two "beep" sounds.

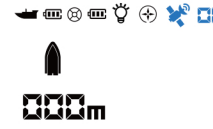

Fishing ground setting

After calibration, you must select a fishing ground before you can set the Position points. ABCD represents four different fishing grounds. At this time, ABCD continues to flash slowly. Press the fishing ground button to select a fishing ground. The letter of the selected fishing ground flashes quickly. Press the coordinate setting button to confirm the selection of the fishing ground. The letter of the selected fishing ground flashes quickly and then stays on. The other three letter disappear, indicating that the fishing ground is successfully selected. If you need to switch fishing grounds, press the fishing ground key to switch.

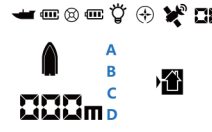

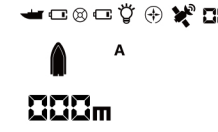

Original point setting

The positioning point setting can only be operated when the number of GPS satellites is more than 8. After the boat calibration is completed, the boat stops at the shore as the starting point. Select the origin icon through the selection key, and press the "Coordinate Setting Key" of the remote control to confirm the setting of the original point. At this time, the icon of the origin on the remote control screen flashes first and then stays on, and the coordinate background becomes dark, indicating that the origin setting is successful. After the original point setting is completed, you can select other numbers on the remote control screen in this way to set and store other positioning points. Note: After setting the original point, the distance displayed on the remote control screen is the distance between the boat and the original point.

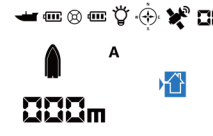

Set the positioning point

After setting the original point, when the boat is driven to the designated location, select other digital fixed points, such as point 1, by selecting the key, and press the coordinate setting key to set the point. The selected point will flash first and then stay on, and the number of the other unset coordinate point will disappear, indicating that the setting is successful. Then you can drive the boat to other places and set more positioning points. If the positioning points on the current page are full, you can turn the page to set more positioning points. Each fishing ground has five pages, each page displays 8 positioning points and the origin, and a single fishing ground can set 40 positioning points. When the boat is turned off, the stored positioning points will still be retained.

Positioning point cruise

When the positioning point is set, select the positioning point to be reached, press the cruise button, and the boat starts to cruise automatically. The positioning point icon on the remote control screen flashes, and it stays on when the positioning point is reached. The distance displayed on the screen is the distance between the two positioning points. When the displayed distance is shortened to 0m, the remote control emits two "beep, beep" sounds, indicating that the boat has reached the selected positioning point and stopped driving. Note: After the boat reaches the positioning point, the distance display on the remote control screen will return to the distance between the origin and the boat. If you want to cancel the operation during the cruise, press and hold the cruise button to cancel the cruise function.

One-key return

One-key return: Press the origin button, the boat will return to the original positioning point. During the driving process, the remote control original point icon flashes and returns to normal when it reaches the original position (you need to set the original point first before this function can be realized). If you want to cancel the one-key return function in midway, long press the cruise button to cancel the boat's return action.

Light switching

Short press the light button on the remote control in sequence, and the headlight and taillight status will cycle through the modes:"steady on-flashing-off". The light icon on the remote control display will switch from "steady on-flashing-off" accordingly.

Fixed-speed Cruise control

Push the two joysticks forward for about 5 seconds to turn on fixed-speed cruise control by default, and push the two joysticks backward to exit fixed-speed cruise control; when fixed-speed cruise control is turned on,The boat icon on the remote control screen lights up in the middle and flashes on the left and right at the same time, and left and right turns can be performed in cruise control mode.

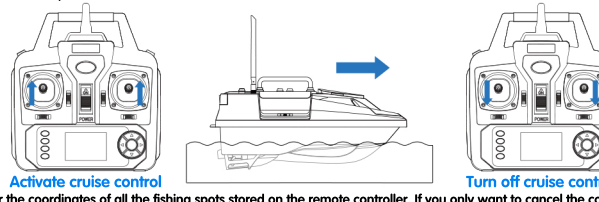

Activate cruise control

Turn off cruise control

Clear button

Press and hold the Clear button to clear the coordinates of all the fishing spots stored on the remote controller. If you only want to cancel the coordinates of a single positioning point, select the number corresponding to the positioning point on the screen and press the Clear button to clear it. After clearing, the number box corresponding to the positioning point disappears.

Lost signal return

When the remote controller is low on power/automatically shuts down/manually turns off, the boat automatically returns to the original position point. (To achieve this function, the original point must be set first)

Original point Key

After setting the original positioning point, if you want the boat to return to the original point, press the original point key and the boat will return to the original point.

Cancel function

During the cruise function and fixed-speed cruise, if you want to cancel the boat's movement, press and hold the cruise button until cancel the boat's movement.

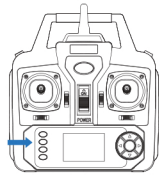

Low battery warning

When the boat voltage is low, the remote controller emits a beeping sound; when the remote controller voltage is low, the remote controller continuously emits a beeping sound and the remote controller indicator light turns red.

Baiting button

Press the baiting button and the silo will pop up. You need to manually restore the silo after baiting.

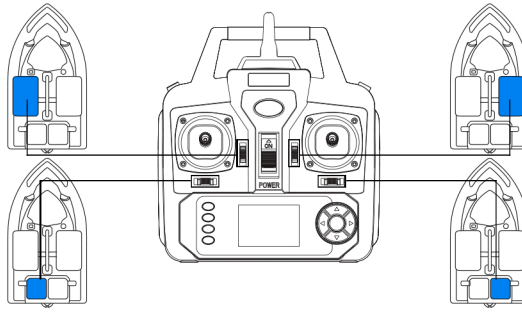

- **Remote control**

  Please remove the batteries when not in use for a long time.

- **Motor**

  Check the motor for any entanglements after each use.

- **Boat Hull**

  1. After use, please wipe off the moisture to keep the hull dry and clean.
  2. When the battery is not used for a long time, please remove it and charge it for storage.
  3. Do not store corrosive liquids and items together
  4. Do not get close to high-temperature objects.
  5. When not in use, please store the nesting boat to prevent it from getting dusty.

  Tips for accessory replacement:
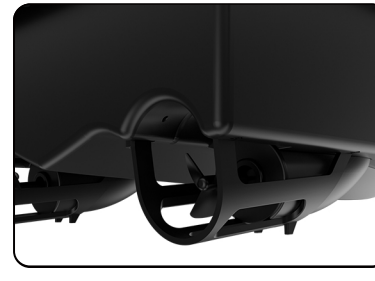
  If you need to replace the boat circuit board, GPS module or remote control, you need to pair the frequency after replacement, and then press and hold the calibration button until the boat light flashes and then off, then it can be used normally.