ARZOPA

D15

15.6 inch Digital Picture Frame



User Manual

Thank you for choosing ARZOPA digital photo frame!

After setting up the frame, you can invite your family or friends to connect to it and share to the frame.

ARZOPA is always striving to achieve your total satisfaction! Should you ever have any questions about your item, please feel free to email our Lifetime Service Center.

Please check out our "ARZOPA Tutorials"on Youtube where you can learn how to get started with ARZOPA.

Please scan the QR code below to find the playlist

YouTube

Before Starting

1. Connect digital frame with power adapter. After the "ARZOPA"logo shows up, it takes about 40 seconds to activate your device
2. Connect digital frame to WiFi (2.4GHz only), Easy to share photos and videos via Arzopa App
3. When adding photos from PC (not applicable to MacBook series) via USB cable, it needs to upgrade the APP to the latest version. And then please follow the prompts to copy the pictures/videos to the ARZOPA frame--ARZOPA frame storage--DCIM folder
4. SD card or USB drive can be used directly as external storage for the frame. Please ensure that the format of the SD card should be FAT32/NTFS
5. It supports picture format by JPG/JPEG/WEBP/PNG and video format by MP4/3GP
6. One-year Free Warranty, if you have any questions please email **support@arzopa.com**

Frame Introduction

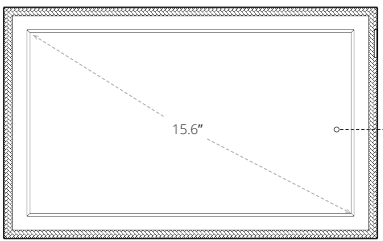

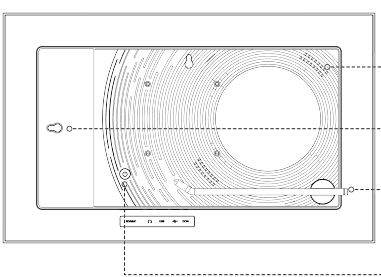

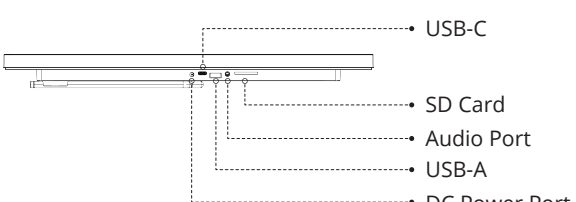

Start Setup

Step 1

Insert the stand into the hole on the frame

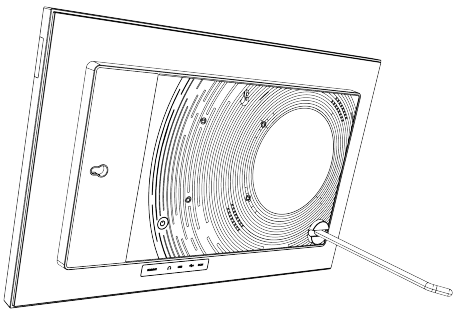

Step 2

Insert power cord firmly

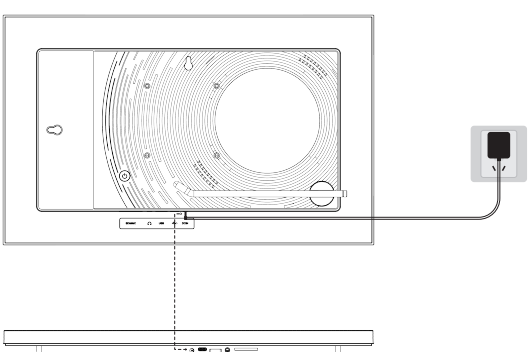

Step 3

Set your frame, language, Wi-Fi, frame naming, time zone, etc.

Step 4

Download and install Arzopa APP in App Store(iOS) or Google Play(Android)

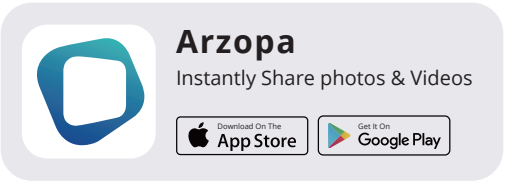

* It can be connected to PC via USB cable to add photos and videos to the digital photo frame(NOT applicable to MacBook series)

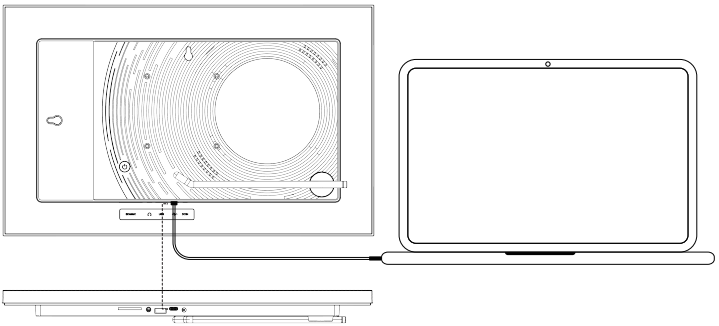

Now you can invite your family and friends to share photos to your frame!

Step 1 Connecting a new friend



1. Download and install Arzopa APP

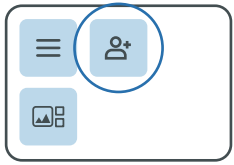

2. Click the add member icon to show sharing code

3. Share the code to your friend or family(valid for 3 hours)



4. Scan the code via Arzopa APP

Step 2 Send Photos/Videos to The Frame



1.Choose one or more receiving digital frames



2.Take a photo or choose from your gallery

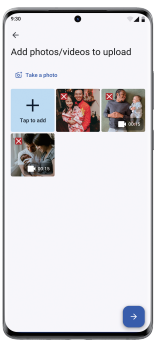

3.Ensure your photos and tap to upload

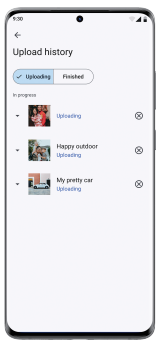

4.Upload completed then show on your frame

Package Contents

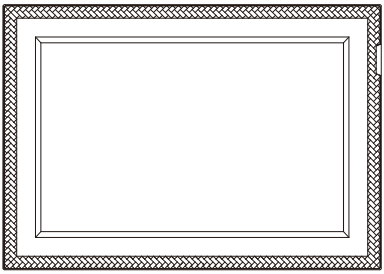

Digital Picture Frame



Stand

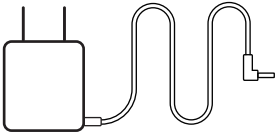

Power Adapter with
Power Cable

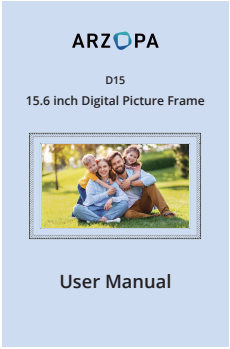

User Manual

Safety precautions

1. Do not disassemble, strike, crush or put into fire.
2. Do not store in high-temperature places.
3. Do not use this product in a humid environment (e. g. bathroom) . Contact with water may cause product failure or damage.
4. Please use the original adapter of this product for power supply.
5. This product is not recommended for use by children under 8 years of age unless under the supervision of their guardian.
6. Recommended product installation height ≤ 2m.

Recycling & Environmentally Friendly Disposal

In order to protect the environment, after the expiration of the products service life, it should not be discarded in the same way asdomestic garbage; Please recycle at a professional recycling center. For further information on the recycling of this product, please consult your local municipality, processing service center, or the store where you purchased the product. You can help protect the environment! Please remember to respect the local regulations, and hand in the non-working electrical equipment to an appropriate waste disposal center.

WEEE-Reg.-Nr. DE 81513723

Email: support@arzopa.com

Website: www.arzopa.com